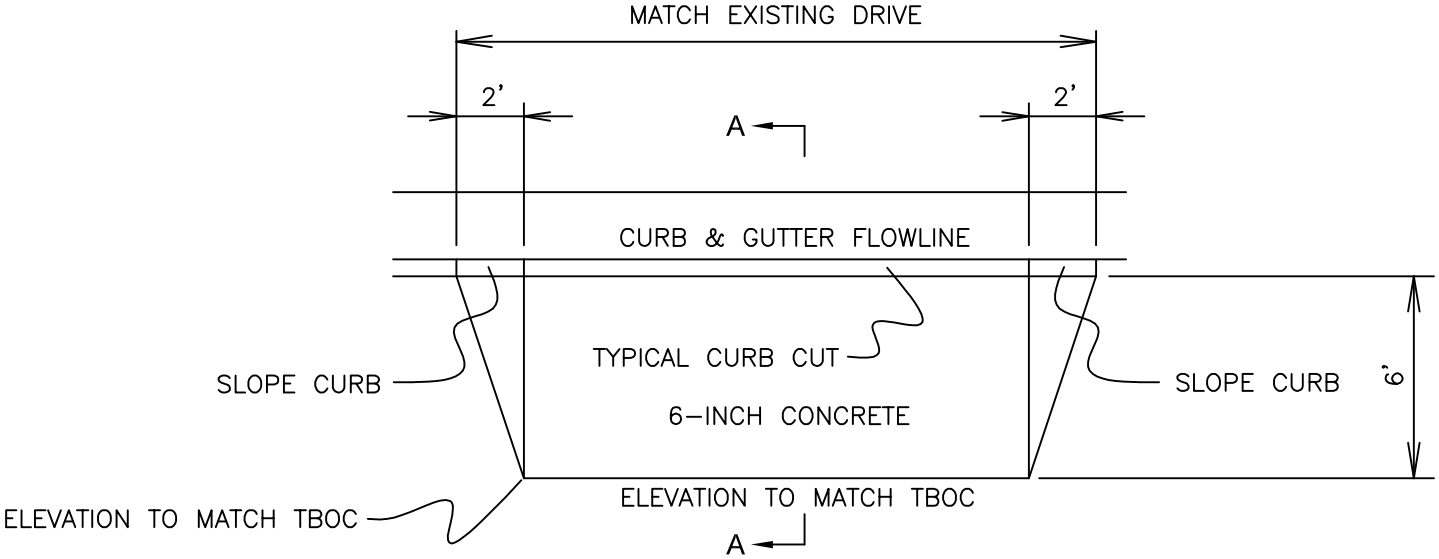

TYPICAL DRIVEWAY APRON PLAN VIEW

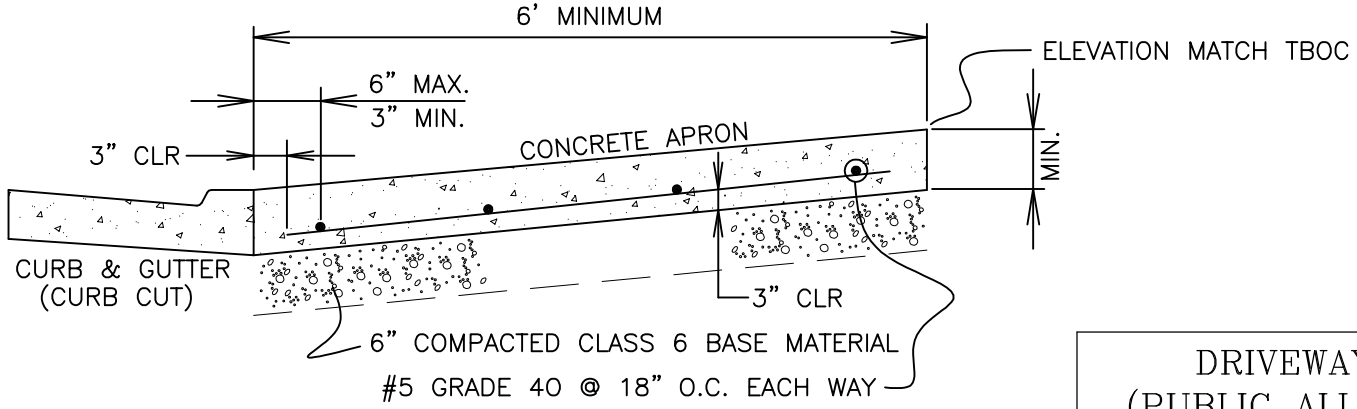

SECTION A–A DRIVEWAY APRON

DRIVEWAY APRON
(PUBLIC ALLEY WAYS)

CITY OF CAÑON CITY
ENGINEERING DEPARTMENT

STANDARD DETAIL

S–9

REVISED: APRIL 2005

S–9