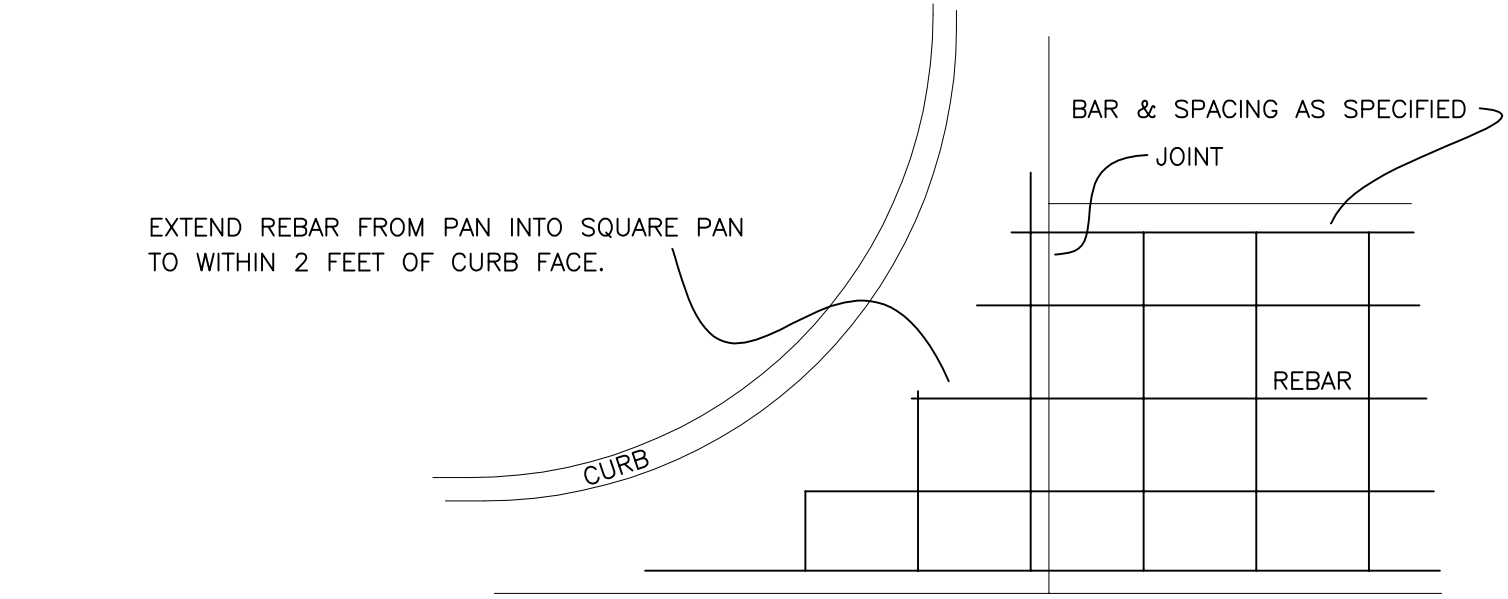

PAN/CURB INTERFACE TYPICAL

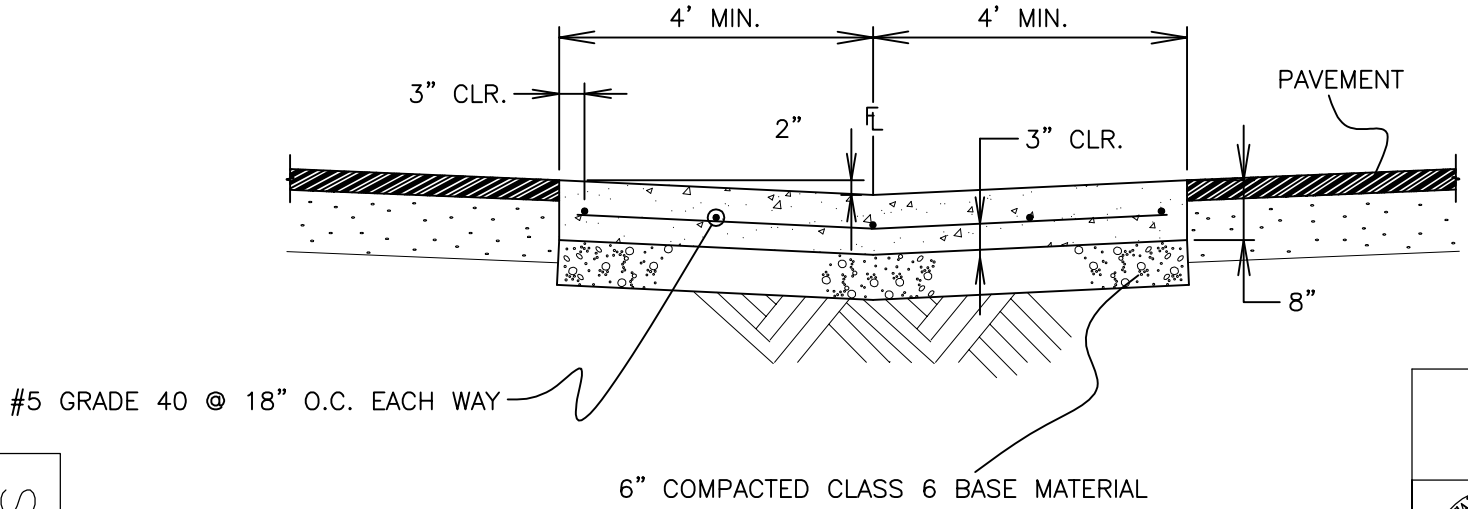

CROSS SECTION TYPICAL

CROSS PAN DETAIL

CITY OF CAÑON CITY
ENGINEERING DEPARTMENT

STANDARD DETAIL

REVISED: AUGUST 2008

S-7

S-7