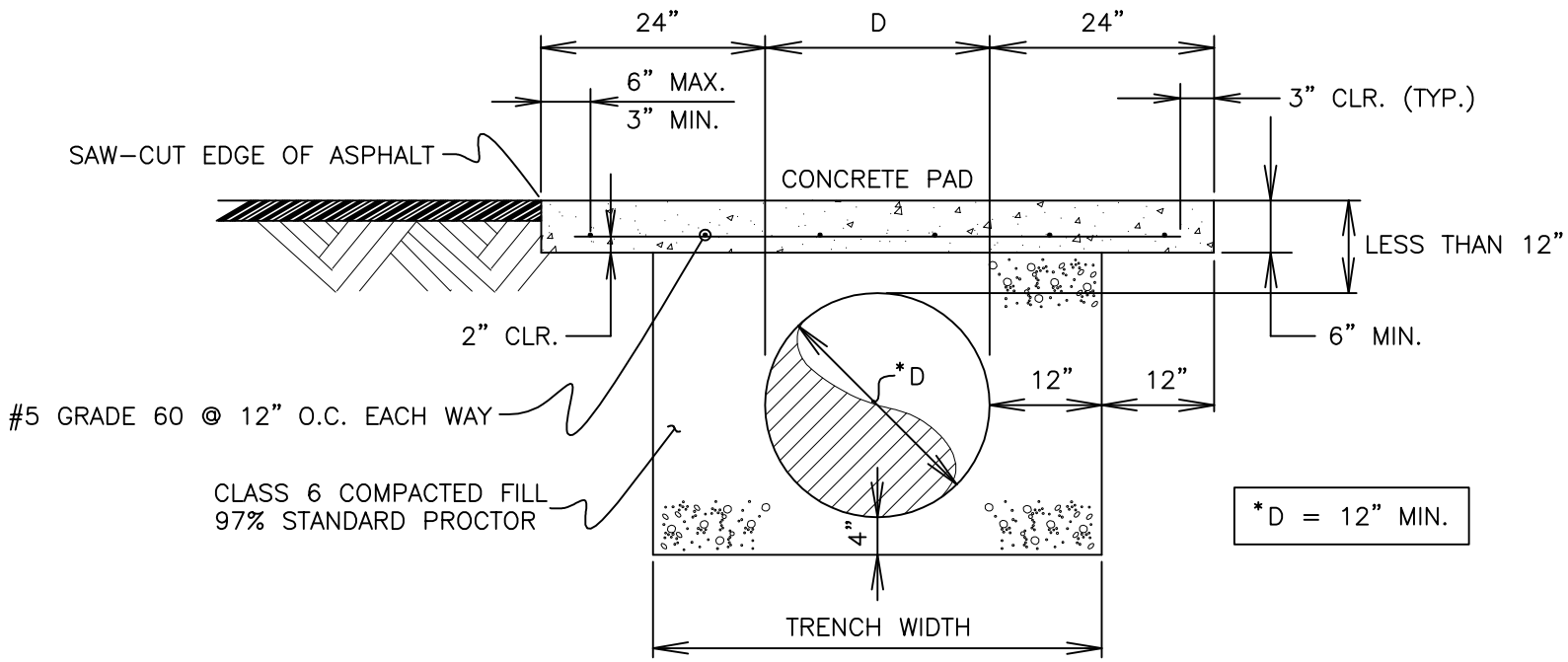

NOTES:

1.) 1" MIN. SPACE BETWEEN PIPE AND CONCRETE PAD
2.) FOR FAMILY RESIDENCE: IF 12 GA. C.M.P. IS USED, THE FULL 12" CLASS 6 COVER OR 6" CONCRETE CAP IS NOT REQUIRED.

STANDARD IRRIGATION DRAINAGE CULVERT (LESS THAN 12" COVER)	
CITY OF CAÑON CITY ENGINEERING DEPARTMENT	
STANDARD DETAIL	S-14b
REVISED: MARCH 2004	

S-14b